STAINLESS STEEL INDIRECT WATER HEATERS

Squire®

Stainless Steel Indirect Water Heater



12 MODELS: 30-119 GALLONS

316L PASSIVATED STAINLESS STEEL TANK

316L HIGH CAPACITY STAINLESS STEEL COIL

FULLY WELDED CONSTRUCTION

DENT RESISTANT POLYPROPYLENE JACKET
WITH CFC FREE FOAM INSULATION

DESIGNED ★ ENGINEERED ★ ASSEMBLED
USA

Lochinvar®

Squire®

Stainless Steel Indirect Water Heater



A NEW CLASS OF WATER HEATER

The Squire Stainless Steel Indirect Water Heater -- with 12 models to choose from in capacities from 30-119 gallons, we are sure to have the right size indirect water heater to fit your application.

Squire features important enhancements that our customers will recognize and benefit from such as a welded and passivated stainless steel tank and heat exchanger, two-inch thick, high-density insulating foam, and best of all it is designed, engineered and assembled in America.

STAINLESS STEEL TANK MANUFACTURING

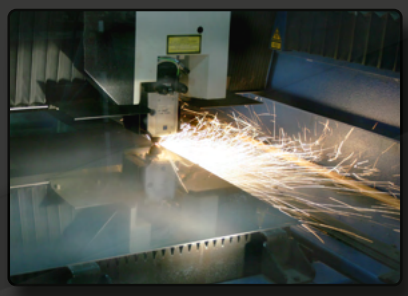

LASER CUT PRECISION

LASER CUT PRECISION

A CNC laser uses Programmable Logic Controls to precisely cut the Squire Indirect Water Heater's tank shell out of 14 gauge 316L stainless steel to a tolerance of .01 inch.

TANK CYLINDER ROLLER

The computer controlled tank cylinder rolling machine ensures that the 316L stainless steel is transformed into a geometrically perfect cylinder.

COIL WINDER

Straight tubes are rolled by a seven axis coil winder and turned into a precise, round coil used in the indirect water heater to transfer the BTU's from the heat source to the potable water stored in the tank.

ROBOTIC WELDER

This state of the art six axis programmable robotic welder uses computer guidance to accurately weld the stainless steel fittings to the tank.

HYDROSTATIC LEAK TEST

After welding, the tank is hydrostatically pressure tested to ensure quality conformance.



ROBOTIC WELDER



PASSIVATED FOR PROTECTION

PASSIVATION PROCESS

Each tank is subjected to a soaking spray of nitric acid. This treatment washes away any iron that was left behind during the welding process and re-establishes the oxide level of the stainless steel to ensure corrosion resistance. By removing iron from the welded surfaces, the Squire is less susceptible to corrosion brought on by aggressive water.

JACKET AND FOAM

The dent resistant polypropylene jacket and ABS caps are attached to the tank assembly, and then high density foam is added using a high pressure dispensing system to provide insulation that will keep the heat where it belongs, in the water. The result is a tank that is jacketed and evenly foam insulated with standby losses as low as 0.5°F per hour.



FOAM INSULATION PROCESS

OUTSTANDING FEATURES

SIX STANDARD MODELS FROM 30 TO 119 GALLONS

The highest quality indirect water heater in the market also has one of the widest ranges of gallon capacities. With 6 models covering gallon capacities from 30 to 119 gallons the Squire is one of the broadest lines available.

SOLAR & ELECTRIC BACKUP MODELS FROM 65 TO 119 GALLONS

With three dual coil models for solar heating in conjunction with a heat source and three models with a coil and an electric element the Squire line of water heaters has a model to fit any residential or light duty commercial solar application.

100% STAINLESS STEEL CONSTRUCTION

Squire Water Heaters are constructed with Stainless Steel materials that are highly resistant to corrosion that can result from poor water quality.

316L PASSIVATED STAINLESS STEEL TANK

316L Stainless Steel material is used for the tank interior for superior durability and long life. The rust prohibitive characteristics of this material make it the perfect material to resist the corrosive tendencies of domestic water. The passivation process consists of a treatment method that enhances and increases the superior corrosion resistance of stainless steel.

316L HIGH CAPACITY STAINLESS STEEL COIL

The Squire's 316L Stainless Steel heating coil efficiently transfers high volumes of BTU's from the heat source to the domestic water with high first hour delivery capability.

DESIGNED, ENGINEERED AND ASSEMBLED IN THE USA

A 100% stainless steel indirect water heater built in the USA, the Squire is completely assembled in Lebanon, Tennessee.

INSIDE LOOK

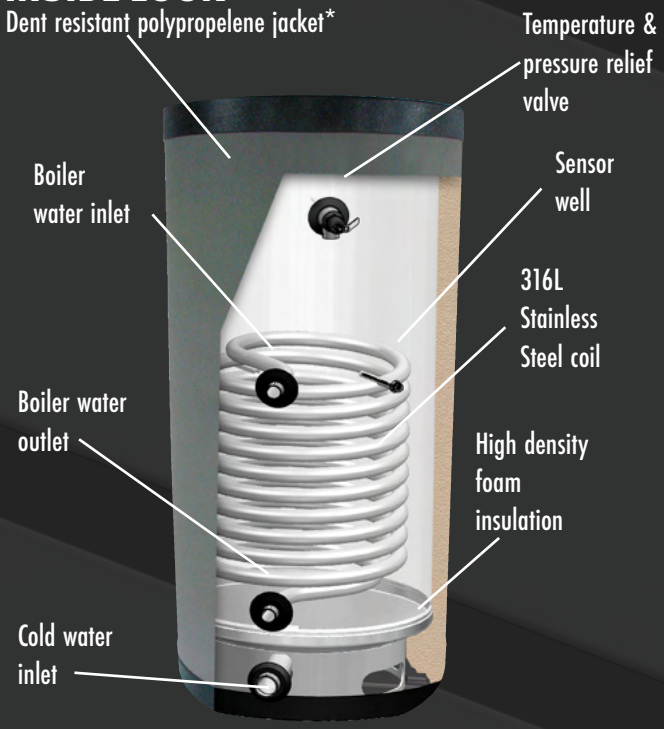

*SET models feature metal jacket



Combine the Knight Heating Boiler with the Squire Indirect for the perfect combination for your application.

HOW IT WORKS

STAINLESS STEEL SIT INDIRECT

The Squire uses the power and efficiency of the building's heating boiler or solar array to generate domestic hot water for showers, dishwashing, clothes washing or any potable hot water demand. The efficiency of the heating boiler could be as much as 20% higher than a direct-fired tank-type water heater. So, why not use that efficiency to "indirectly" provide hot water for all potable applications?

By using the Squire to indirectly heat the domestic water, you eliminate the additional gas line, electrical connections and vent ducts needed with direct-fired tank-type water heaters.

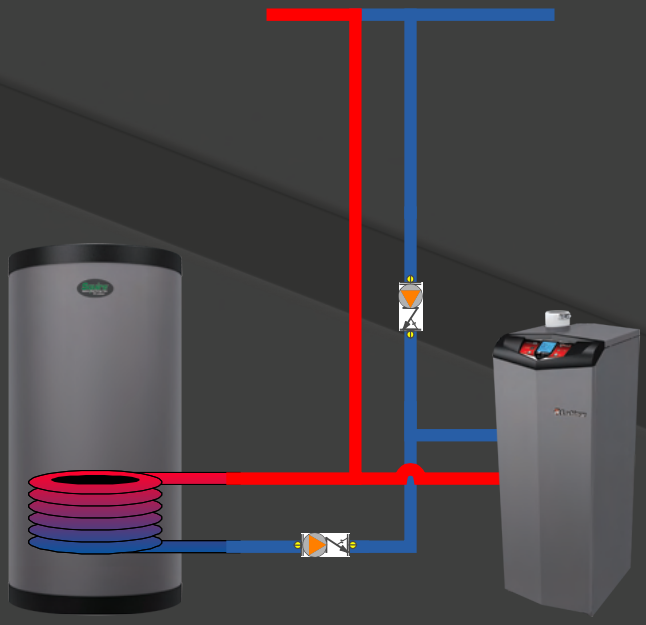

FULLY WELDED CONSTRUCTION

Lochinvar utilizes state of the art, highly accurate robotic welding equipment that results in a fully welded construction method that requires no gaskets or mechanical sealing methods. Gaskets and seals are the weak point of any water storing appliance, therefore Lochinvar's advanced design eliminates this potential failure point.

FACTORY SUPPLIED TANK SENSOR (SIT AND SDT ONLY)

A tank sensor with built in temperature limit is standard equipment on all sizes. This sensor accurately monitors the water temperature and sends a call for heat when the tank temperature drops below the desired setpoint. This sensor is 100% compatible and can be directly connected with Lochinvar's line of KNIGHT Heating Boilers.

T&P RELIEF VALVE

Supplied with the unit in the carton. (shipped loose)

HIGH DENSITY CFC/HCFC FREE POLYURETHANE FOAM

Two inches of R-13.4 High Density Polyurethane foam yields the lowest standby losses in the industry.

ATTRACTIVE RUST RESISTANT JACKET

Resistant to scratches and dents, the Squire will maintain its classic high quality appearance for years.

LIMITED LIFETIME WARRANTY*

Lochinvar believes that the Squire is the best built Indirect Water Heater on the market, we have a Limited Lifetime warranty to prove it.

*SIT models only

SOLAR INDIRECT WITH SDT DUAL COIL

Squire Indirect Water Heaters with a dual coil design have a coil in the lower portion of the tank to transfer heat from a solar array to the water that is stored in the tank.

An additional coil in the upper portion of the tank will transfer heat from a back-up boiler into the water. This will ensure that the tank has ample hot water even at times when the solar array cannot generate enough heat to suitably heat the tank.

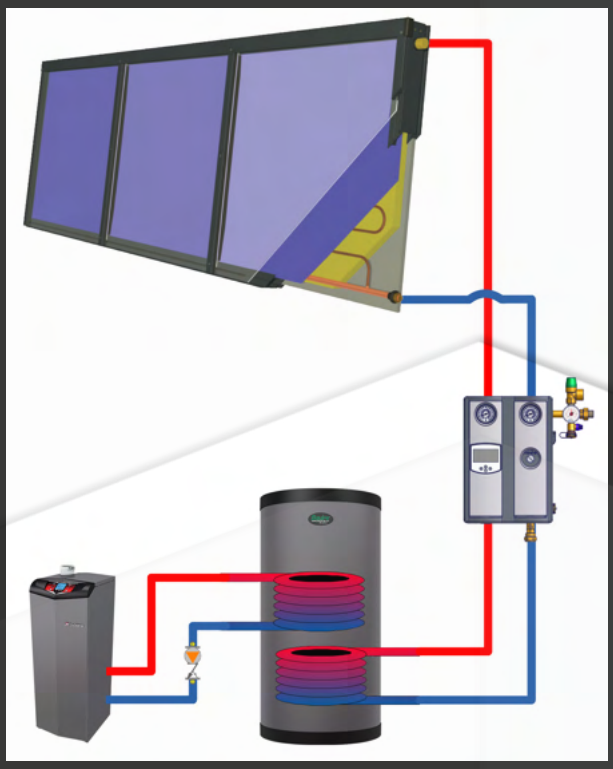

SOLAR INDIRECT WITH SET ELECTRIC BACK-UP

Squire Indirect Water Heaters with a single coil and an electric element are designed to collect heat from a solar array and transfer the collected heat into the stored water by way of the indirect coil which is located in the lower portion of the tank.

An electric element, which is controlled by a factory supplied thermostat, is positioned in the top half of the tank to ensure ample hot water even at times when the solar array is not capable of collecting the heat required by the DHW demand.

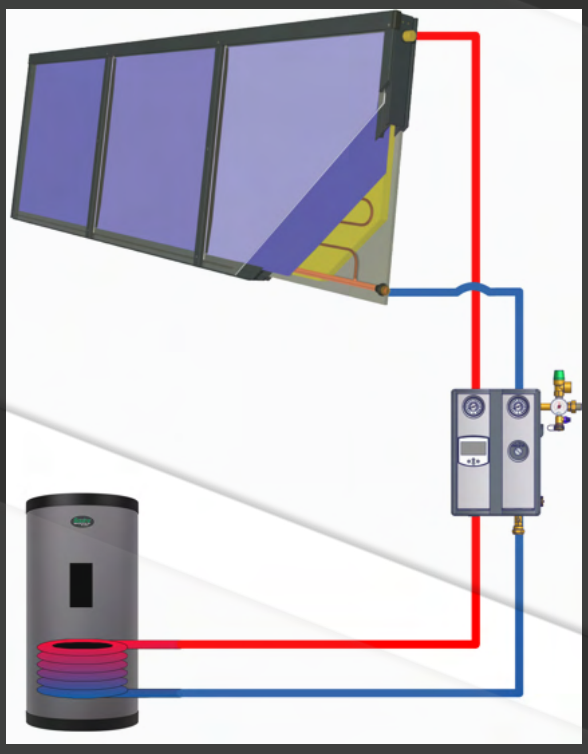

STAINLESS STEEL INDIRECT SIT MODELS DIMENSIONS AND SPECIFICATIONS

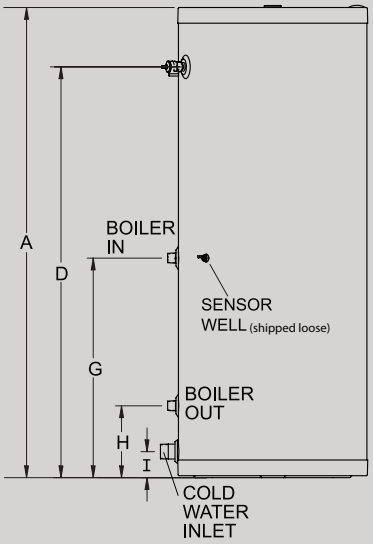

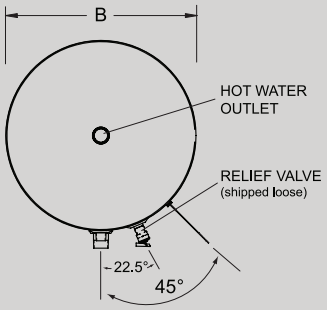

The "Hot Water Outlet" connection is Female NPT.
All other connections are Male NPT.

SIT MODELS DIMENSIONS AND SPECIFICATIONS

Model Number	A	B	D	G	H	I	Domestic Water Conn.	Coil Connection Size	Shipping Wt. (lbs.)
SIT030	39-1/2"	20"	32-1/4"	21-3/4"	8-1/4"	3"	1"	1"	79
SIT040	55-3/4"	20"	48-1/2"	25-1/4"	8-1/4"	3"	1"	1"	105
SIT050	48"	24"	39-3/4"	24-1/2"	9-1/4"	3-3/4"	1"	1"	131
SIT065	60"	24"	52-1/4"	28"	9-1/4"	3-1/4"	1-1/2"	1"	147
SIT080	69-1/2"	24"	61-3/4"	28"	9-1/4"	3-1/4"	1-1/2"	1"	177
SIT119	68-1/4"	28"	60-1/4"	31-3/4"	9-1/4"	3-1/4"	1-1/2"	1"	213

Model Number	Capacity (Gallons)	Heat Source Water Volume (Gallons)	1st Hour Rating (Gallons)	Standby Loss (°F/Hr)	First Draw Gals.	Continuous Draw Rating (GPH)	Heat Source Friction Loss (FT. w.c)	Min. Heat Source Flow Rate (GPM)	Min.Heat Output Rate (Btu/Hr)
SIT030	27	1.1	180	1.5	24	156	3.9	14	99,000
SIT040	40	1.6	208	0.9	27	181	4.5	14	115,000
SIT050	52	1.7	255	0.9	45	210	5.3	14	133,000
SIT065	67	1.9	328	0.7	65	263	5.7	14	154,000
SIT080	82	2.1	340	.06	74	266	5.7	14	160,000
SIT119	113	3.2	431	.05	109	322	6.5	14	199,000

These rating were obtained with a heat source output rate shown in the table above at a heat source flow rate of 14 gpm. Other results shall be obtained under different conditions.

Optional thermostat available for use with other boiler models.

SIT MODELS
All models standard with a Lifetime Limited Warranty against tank failure. All parts are warranted for five years. Ten year limited tank and one year parts warranty on all models when installed in a commercial application.

C US LOW LEAD CONTENT

SOLAR STAINLESS STEEL INDIRECT DIMENSIONS AND SPECIFICATIONS

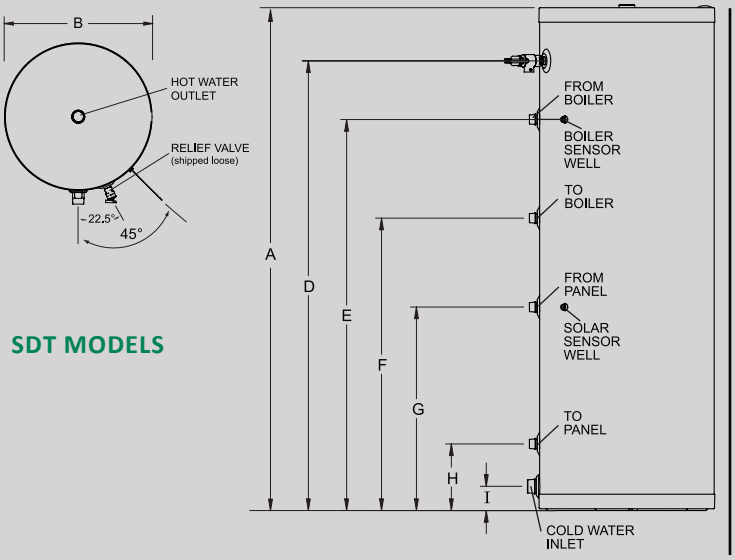

SDT MODELS

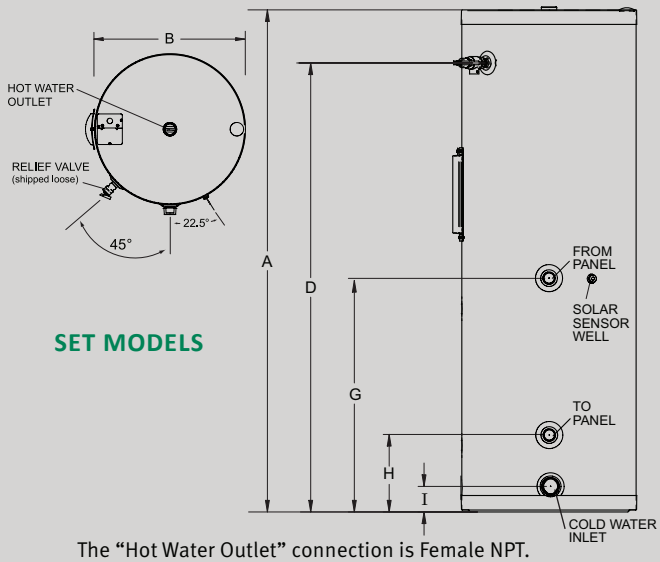

SET MODELS

The "Hot Water Outlet" connection is Female NPT.
All other connections are Male NPT.

SDT MODELS DIMENSIONS AND SPECIFICATIONS

Model Number	A	B	D	E	F	G	H	I	Domestic Water Conn.	Coil Connection Size	Shipping Wt. (lbs.)
SDT065	60″	24″	52-1/4″	47-1/4″	33-3/4″	28″	9-1/4″	3-1/4″	1-1/2″	1″	158
SDT080	69-1/2″	24″	61-3/4″	53-3/4″	40-1/4″	28″	9-1/4″	3-1/4″	1-1/2″	1″	188
SDT119	68-1/4″	28″	60-1/4″	54-1/2″	37-1/2″	31-3/4″	9-1/4″	3-1/4″	1-1/2″	1″	224

Model Number	Capacity (Gallons)	Heat Source Water (Gallons)	Boiler Heat Source Water (Gallons)	Standby Loss (°F/Hr)	Continuous Delivery (GPH)	1st Hour Delivery (Gallons)	Min. Coil Load (Btu/Hr)	Flow Rate (GPM)	Friction Loss (Ft. Hd.)
SDT065	66	2.1	1.7	0.7	175	205	128,000	14.0	3.4
SDT080	79	2.1	1.7	0.6	175	208	128,000	14.0	3.4
SDT119	110	3.2	2.6	0.5	251	301	181,000	14.0	4.9

Performance data based on incoming cold water at 50°F and a Delta T of 77°F. Delivery ratings for boiler coil only. Includes tank sensor for use w/ KNIGHT Heating Boiler.

SET MODELS DIMENSIONS AND SPECIFICATIONS

Model Number	A	B	D	G	H	I	Domestic Water Conn.	Coil Connection Size	Shipping Wt. (lbs.)
SET065	60″	24″	52-1/4″	28″	9-1/4″	3-1/4″	1-1/2″	1″	149
SET080	69-1/2″	24″	61-3/4″	28″	9-1/4″	3-1/4″	1-1/2″	1″	179
SET119	68-1/4″	28″	60-1/4″	31-3/4″	9-1/4″	3-1/4″	1-1/2″	1″	215

Model Number	Capacity (Gallons)	Heat Source Water (Gallons)	Standby Loss (°F/Hr)	Electric Continuous Delivery (GPH)	Electric 1st Hour Delivery (Gallons)
SET065	67	1.9	0.7	24	54
SET080	81	2.1	0.6	24	57
SET119	113	3.2	0.5	24	75

All SET models: 4500w 240v 1 phase.

SET & SDT MODELS
All models standard with a 5 Year Limited Warranty against tank failure. All parts are warranted for one year.

Lochinvar®
Lochinvar, LLC
300 Maddox Simpson Parkway
Lebanon, Tennessee 37090
P: 615.889.8900 / F: 615.547.1000
Lochinvar.com

*SET models only

LOW LEAD CONTENT